Molecular Ecology (2002) **11**, 465–471

Population fragmentation in the southern rock agama, *Agama atra*: more evidence for vicariance in Southern Africa

CONRAD A. MATTHEE and ALEXANDER F. FLEMMING
Department of Zoology, Stellenbosch University, Stellenbosch, 7602, South Africa

Abstract

Mitochondrial DNA sequence data derived from two genes were used to infer phylogeographical relationships between 13 *Agama atra* populations. Three distinct geographical assemblages were found among the lizard populations. The first occurs in southern Namibia, the second is restricted to the western dry arid regions of South Africa, whereas the third is distributed throughout the more mesic southern and eastern parts of the subcontinent. Geographically structured differences among populations within *Agama* clades are probably the result of dispersal and historic isolations among populations. At the broader scale, there were marked congruences between the *Agama* genetic discontinuities and those described previously in other rock-dwelling vertebrates such as *Pronolagus rupestris* and *Pachydactylus rugosus*. This suggests vicariance, probably as a response to natural climatic changes during the past three million years.

Keywords: 16S rRNA, Agamidae, cytochrome *b*, evolution, lizard, phylogeography

Received 15 August 2001; revision received 23 November 2001; accepted 23 November 2001

Introduction

Africa has profound biological diversity and the continent features at least five regions with exceptional high concentrations of endemic species (Myers *et al*. 2000). Importantly, two of these regions, the Cape Floristic Province and the Succulent Karoo are situated in South Africa. Very little is known of the genetic structure in taxa occupying these biodiversity hotspots, but two recent studies on animal species occurring in rocky habitats indicated deep genetic disjunctions among populations (for example see the red rock rabbit, Pranologus Matthee & Robinson 1996; thick-toed gecko, *Pachydactylus*, Lamb & Bauer 2000).

Several hypotheses can be used to explain the disjunct genetic structures in Africa (Prinsloo & Robinson 1992; Matthee & Robinson 1996, 1997; Branch & Whiting 1997; Bauer 1999; Lamb & Bauer 2000). Amongst others, abiotic factors such as the formation of mountain ranges (Moon & Dardis 1988), the development of the Kalahari–Namib arid regions (Bauer 1999), and climatic change causing expansion and contraction of suitable habitat (Deacon & Thackeray 1983; Thackeray 1987; Hewitt 2000) can all potentially influence historic and/or present patterns of distribution. In addition, biotic factors such as habitat choice, dispersal capabilities and behavioural attributes could also play a role in the genetic structuring of species (Matthee & Robinson 1999).

In an attempt to better identify and describe the historical features that figure prominently in southern African biogeography we investigated the phylogeography of the southern rock agama, *Agama atra*. This species was chosen because concordant mitochondrial DNA (mtDNA) profiles in phylogenetically unrelated species may reveal insights into vicariance. *Agama atra* is largely dependent on the availability of rocky habitats (Branch 1998), has limited dispersal capabilities and has a distribution (Fig. 1) overlapping the genetic discontinuities in *Pronolagus* and *Pachydactylus*.

Intriguingly, *A. atra* populations are also divisible into two geographical groupings according to size and reproductive activities (Mouton & Herselman 1994; Flemming & Monton in press). The first group occurs predominantly in the dry north-western regions of the Northern Cape Province and comprises a large-sized southern rock agama with a long breeding season, whereas the second group occupies a more southern and eastern distribution in South Africa and is smaller in size with a shorter breeding season (Flemming 1996). These two groupings also correspond loosely with the currently defined *A. atra* subspecies (Fig. 1), and neither

Correspondence: Conrad A. Matthee. Fax: 27-21-808-2405; E-mail: cam@maties.su.ac.za

© 2002 Blackwell Science Ltd

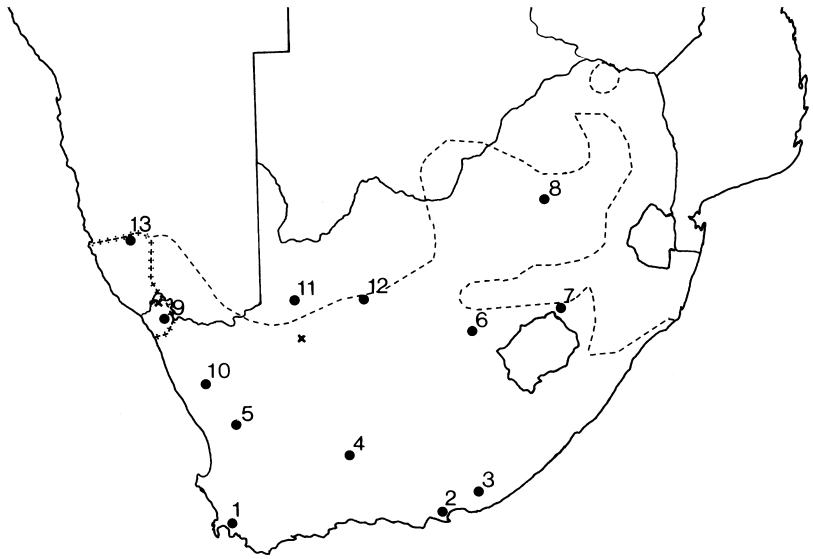

Fig. 1 Sampling localities of *Agama* species used in this study. *Agama atra* populations are indicated by solid dots. *A. atra* populations were sampled at 1 = Gordon's Bay ($n = 4$); 2 = Port Elizabeth ($n = 2$); 3 = Grahamstown ($n = 1$); 4 = Beaufort West ($n = 5$); 5 = Nieuwoudtville ($n = 3$); 6 = Bloemfontein ($n = 2$); 7 = Phuthaditjhaba ($n = 4$); 8 = Pretoria ($n = 3$); 9 = Eksteenfontein ($n = 4$); 10 = Vaalputs ($n = 3$); 11 = Augrabies ($n = 4$); 12 = Postmasburg ($n = 2$); and 13 = Aus ($n = 2$). The crosses represent *A. anchietae* populations (Sendelingsdrift and Kenhard; $n = 4$). The distribution of what is currently recognized as *A. atra atra* is indicated by the broken line while the dotted broken line represents the boundaries of *A. a. knobeli* (taken from Branch 1998).

the exact geographical boundaries nor the extent of genetic differentiation among these ecological/taxonomic assemblages are clearly defined. Although the main aim of this study was to investigate concordance among phylogeographical structures in three unrelated saxicolous vertebrates, we were also interested to assess whether mtDNA lineages coincide with the distinct reproduction and body size patterns found in *A. atra*. Finally, it was envisaged that this investigation would shed light on the taxonomic status of currently described *A. atra* subspecies (Branch 1998).

Materials and methods

Sample and data collection

In total, 39 *Agama atra* individuals from 13 populations were sampled (Fig. 1). From a taxonomic perspective, the type localities of both subspecies were included (*atra* = Van Rhyn's Pass/Nieuwoudtville; *knobeli* = Aus, Fig. 1). To determine an appropriate outgroup for phylogenetic analyses we included sequence data of *A. aculeata*, *A. planiceps* and *A. anchietae* in our preliminary investigations (data not shown). The latter species was selected as the outgroup based on a sister taxon relationship between them and *A. atra*. Total genomic DNA was extracted from preserved tissue and amplified using standard polymerase chain reaction (PCR) protocols. Two mammalian cytochrome *b* primers (L15162 and H15915; Irwin *et al*. 1991) were used to amplify the 5′-portion of the protein coding gene and a species-specific internal L-primer (5′-AACAGGATCC-AGCAAYCCAAC-3′) was subsequently designed to obtain amplification for all individuals. The 16*S* rRNA amplification was performed using the A and B primers from Gatesy *et al*. (1997). The PCR reaction mix was purified with QIAquick (Qiagen Ltd), and the products were cycle sequenced using Big Dye terminator chemistry (Perkin–Elmer, Applied Biosystems). The reactions were run and analysed on a 377 ABI sequencer.

Both the light and heavy strands were sequenced and the final protein data were screened for functionality (Esposti *et al*. 1993; Arctander 1995). All manually aligned sequences have been deposited in GenBank (Accession nos AF355476 to AF355568). The data were combined after performing the partition homogeneity test in PAUP Version 4.0b8/ALTIVEC, which was also used for all parsimony, neighbour joining and maximum likelihood searches. For parsimony analysis, heuristic searches included 100 replicates of a random taxon addition sequence and to test for congruence among topologies an arbitrarily differential weighting of transitions and transversions was also applied (ti/tv = 1:2). All indels in the ribosomal data were treated as missing characters. The distance trees were generated using the HKY85 correction and the maximum likelihood tree was generated using the neighbour joining tree as the starting point and parameter settings were left on the default option in PAUP. Nodal support for parsimony and neighbour joining searches was assessed by 1000 bootstrap replicates and 100 were performed for maximum likelihood. The minimum number of substitutions between haplotypes was estimated in PAUP and haplotypic diversity was calculated following the formulae proposed by Nei & Tajima (1981).

Results

Sequence data characteristics

Analyses of the 540 mtDNA cytochrome *b* characters revealed 189 variable and 146 parsimony informative characters among the 39 *Agama atra* specimens included in the

mitochondrial study. Comparisons among sequences showed that 18.8% of the variable characters were at the first codon position, 8.3% at the second codon position and 54.4% at the third codon position. In total, 31 mtDNA cytochrome *b* haplotypes were identified; HKY85 corrected sequence divergence values among haplotypes ranged from a low of 0.20% between specimens collected at the same locality to a high of 17.8% between a haplotype from Postmasburg and Phuthaditjhaba (Fig. 1). When the gene segment was translated to amino acid codons, 32 of the 180 amino acid sites were variable and no stop codons were evident (Esposti *et al*. 1993; Arctander 1995).

The 476 nucleotides of the more conservative mtDNA ribosomal gene comprised 46 variable characters, of which 42 were parsimony informative. 16*S* rRNA sequence divergence values among the 24 *A. atra* haplotypes range from a low of 0.21% among haplotypes within the same population to a high of 4.41% between individuals from Augrabies and Gordon's Bay (Fig. 1). A single 2-bp deletion was present among all specimens from Vaalputs, Eksteenfontein, Augrabies, Postmasburg and Aus. In addition, two overlapping indels (comprising 1 and 2 bp, respectively) were also detected. The 1 bp overlapping indel was confined to the animals from Vaalputs and Eksteenfontein and the 2 bp overlapping deletion occurred in animals from Augrabies and Postmasburg.

Phylogenetic analyses

Both the cytochrome *b* and 16*S* rRNA gene sequences produced the same basal phylogeny; differences in tree topologies were restricted to terminal branches swapping and the partition homogeneity test resulted in no significant conflict between fragments ($P = 0.42$). Analyses of the combined data produced 34 haplotypes (labelled A–h; Fig. 2) and this high level of uniqueness is reflected in a haplotypic diversity value of 0.99. *A. atra* specimens from all localities were genetically distinct and haplotypes within populations were generally more closely related to each other than to haplotypes from adjacent populations.

Parsimony (irrespective of the weighting scheme), neighbour joining and maximum likelihood analyses all supported the presence of at least three distinct mtDNA clades (Fig. 2). The neighbour joining tree was largely congruent with the parsimony analyses and although unweighted parsimony analysis resulted in 319 equally parsimonious trees of 431 steps, branch swapping was only evident at the terminal nodes (which mostly identify relationships among haplotypes within populations). Homoplasy was low (CI = 0.68; RI = 0.91) and the nodes defining the three genetic assemblages had bootstrap support of > 70% (with the exception of weighted parsimony where the node identifying the north-central clade was supported by 59%).

The south-eastern clade was represented by specimens derived from the southern and eastern part of the species distribution (haplotypes A–U; Fig. 3A). In broad terms, this is linked to the Great Escarpment mountain range (Fig. 3B). The north-central clade is situated in the north-western arid regions of South Africa (haplotypes V–f; Fig. 3A). The third and last distinct evolutionary lineage comprises specimens sampled at Aus, Namibia (haplotypes g and h; Fig. 3A). The three clades were separated by at least 68 mutational steps from each other and this value translates to an average sequence divergence of 7.12% (±0.44%). Within clades, the diversity estimates were much lower and ranged from 0.10% in the northern clade to 4.79% in the north-central clade.

The maximum likelihood branch lengths (Fig. 2B) indicated a fair amount of intraclade variation. For example, within the south-eastern clade, haplotype U (representing the Pretoria specimens from the Magaliesberg region) differed by at least 41 site changes from haplotype O (representing the Bloemfontein specimens; Fig. 3A). Within the north-central clade, an even higher number of site changes (60 or more) differentiated the Augrabies and Postmasburg specimens (haplotypes c, d, e and f originating among others from the Kuruman hills region; Fig. 3) from the Vaalputs and Eksteenfontein exemplars on the west coast of the continent (haplotypes V-b; Fig. 3).

Discussion

Systematics of Agama atra

From a taxonomic viewpoint the outcome of the mtDNA study points to a complex situation. Although the genetic differentiation of the southern African *atra* and the Namibian *knobeli* subspecies is supported by all our analyses the third mtDNA group (present within the geographical rage of *Agama atra atra*) has never been detected previously and hence remains undescribed as a unique taxon. In fact, the mtDNA haplotypes belonging to the south-eastern and the north-central clades are on average more distantly related to each other (9.45% sequence divergence and an average of 88 mutational changes) than either are to *knobeli* (northern clade). Although there is a poor relationship between taxonomic rank and genetic divergence (Johns & Avise 1998; Avise & Johns 1999), it is noteworthy that the magnitude of cytochrome *b* sequence difference separating the *A. atra* clades is similar to or larger than the published cytochrome *b* values separating distinct lizard species (Johns & Avise 1998; Lamb & Bauer 2000). This clearly points to the need to examine data from other sources (including nuclear DNA markers and a thorough morphological study covering the entire distribution of *A. atra*) before a definitive statement can be made on the taxonomic status of the three agama mtDNA clades.

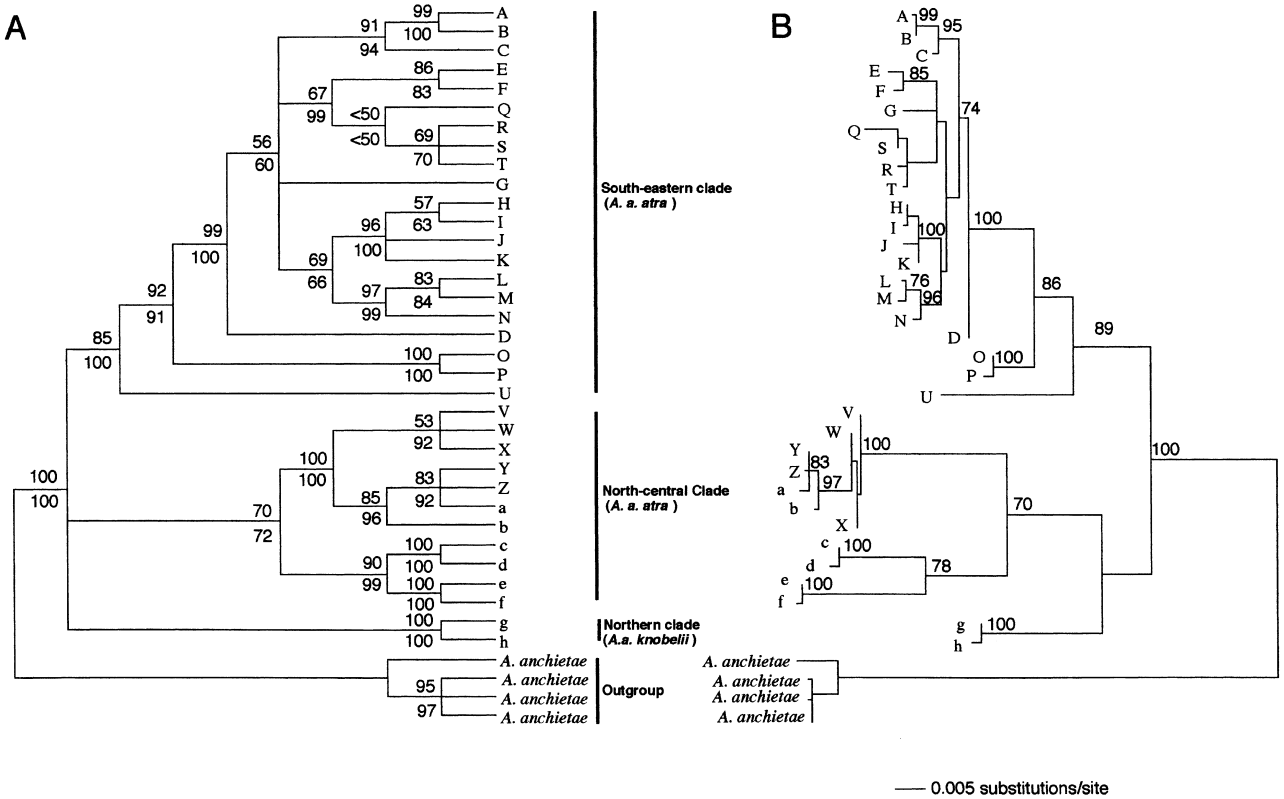

Fig. 2 (A) Unweighted bootstrap parsimony tree obtained for the 34 *Agama atra* haplotypes found in the present study. Bootstrap values are presented at nodes with numbers above the branches representing parsimony values while those below are the neighbour joining support. The three mitochondrial DNA clades (see text for details) are indicated by the solid vertical lines. (B) Combined maximum likelihood topology for the *A. atra* haplotypes. Branch lengths are drawn proportionally and the values at the nodes represent the bootstrap support. Only bootstrap support ≥ 70% are indicated.

Agama atra *phylogeography*

Bauer (1999) suggested that complexly dissected mountainous habitats have significantly affected the process of cladogenesis in southern African rock-dwelling geckos. *A. atra* shows a similar pattern and a large component of the phylogeographical structure can be attributed to the distribution of mountains and rocky outcrops in the region. For example, the haplotypes of the populations belonging to the north-central clade are characterized by deep divisions (as also indicated by the long internal branch lengths of the maximum likelihood tree; haplotypes V-f; Fig. 2B). As expected, the haplotypes belonging to this clade occur within a region noted for isolated mountain ranges and rocky outcrops (Fig. 3B localities 1 and 2) with extensive plains separating rocky outcrops (Moon & Dardis 1988). However, most populations forming part of the south-eastern clade (haplotypes A-U are situated in the continuous Drakensberg/Great Escarpment mountain range which extends all along the southern and eastern coastline of South Africa (Fig. 3A,B).

At a finer scale, it is clear from the maximum likelihood topology (Fig. 2B) that most of the variation within the north-central clade can be attributed to the genetic distinctness of haplotypes c and d from Augrabies (Fig. 3B, number 1) and e and f from Postmasburg (Fig. 3B, number 2). In contrast, most of the south-eastern clade's variation is due to the uniqueness of haplotypes O and P from Bloemfontein (Fig. 3B, number 3) and haplotype U from Pretoria (Fig. 3B, number 4). Importantly, all four of these localities fall outside the southern African escarpment and comprise rocky outcrops isolated by extensive intervening plains (see Fig. 3B).

There is marked phylogeographical congruence between *A. atra* and other rock-dwelling species. First, the isolation of the Augrabies population in the north-central clade is not unique among reptiles. Branch & Whiting (1997) described a new *Platysaurus* species (*P. broadleyi*) from the Augrabies area and postulated that there is no genetic exchange with the nominate *P. capensis* from Namaqualand and Namibia. Second, when the structure of the red rock rabbit, *P. rupestris* (Matthee & Robinson 1996), is compared with our study, the Kuruman population (represented by Postmasburg in our study) once

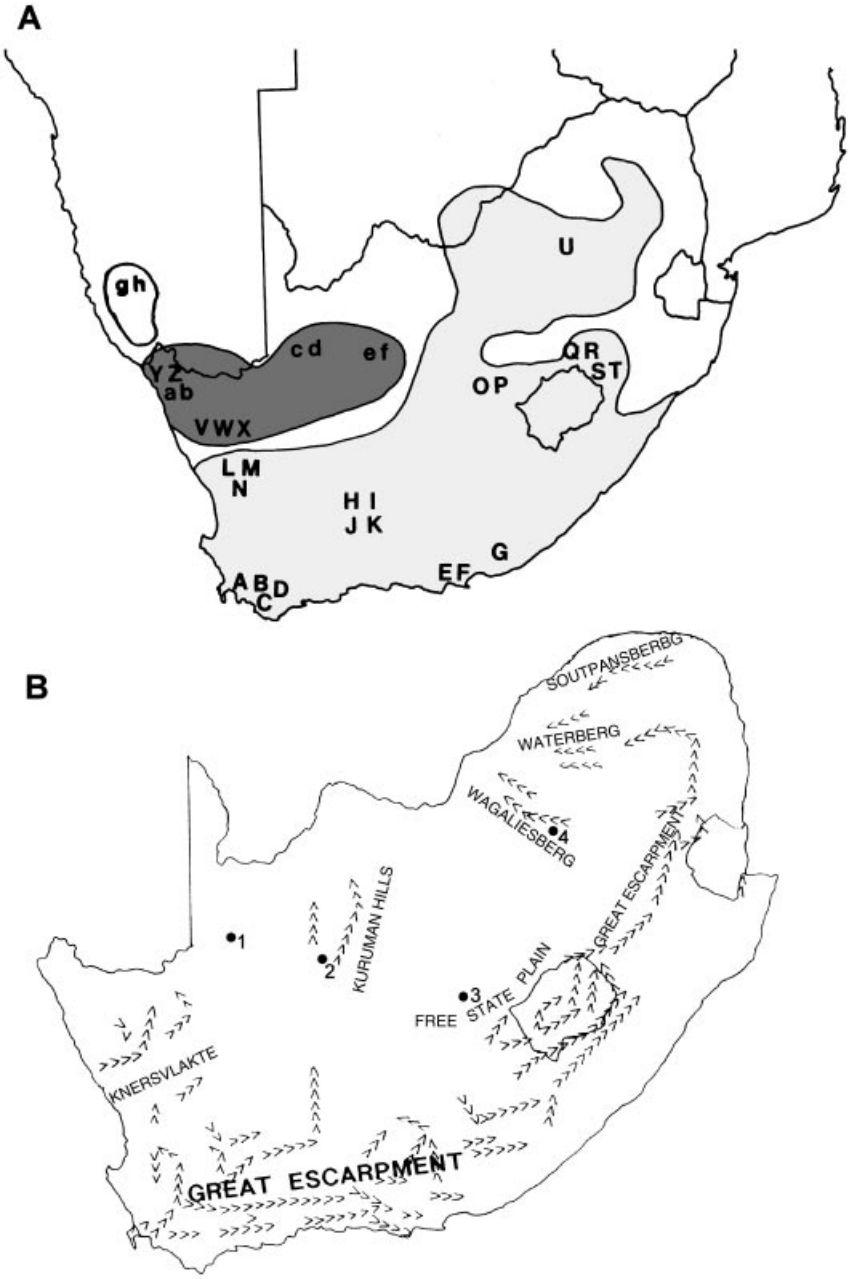

Fig. 3 (A) Graphic representation of the three mitochondrial DNA clades as suggested by the cluster analyses performed on the southern rock agama haplotypes included in this study. Light grey shading represent the south-eastern clade, dark grey shading indicate the north central clade and the unshaded clade illustrate the northern clade. (B) Major topographic relieves of South Africa (map redrawn from Bristow & Ward 1988). Also indicated are the isolated populations represented by 1 = Augrabies, 2 = Postmasburg, 3 = Bloemfontein and 4 = Pretoria (see text for details).

again stands out as a genetically isolated lineage. It has been suggested that this latter region may have served as a refuge during the last glacial maximum (Matthee & Robinson 1996).

At the broader geographical scale, the distribution of the *A. atra* mtDNA haplotypes is clearly discordant with a pattern that would result from continuous gene flow among populations. The three mtDNA assemblages are geographically contiguous (Fig. 3A), but mtDNA sequences from populations separated by ≈ 75 km (population 5 in the south-eastern clade represented by haplotypes L, M and N and population 10 in the north-central clade represented by haplotypes V, W and X; Fig. 1) differ by 82–84 site changes. Similarly, Aus (northern clade represented by haplotypes g and h; population 13 in Fig. 1) and Eksteenfontein (north-central clade represented by haplotypes Y, Z, a and b, population 9 in Fig. 1) are only 125 km apart but contain specimens separated by 68–72 mutational steps. These results, coupled with the absence of shared haplotypes among mtDNA assemblages, possibly reflect long-term geographical barriers to female gene flow among the clades.

Unfortunately, apart from these mtDNA data, the genetic distinctiveness of the populations belonging to the northern clade has never been investigated. Nevertheless,

it is interesting that a previous allozyme investigation also supported the existence of the south-eastern and north-central assemblage which differed by a Nei's genetic distance value of 0.028 (Flemming 1996). In addition, there is congruence between the mtDNA clades detected herein and the reproduction and body size patterns previously identified by Mouton & Herselman (1994) and Flemming & Mouton (in press). All populations belonging to the north-central clade comprise large lizards characterized by an extended breeding season, whereas those in the south-eastern clade are small with a short seasonal breeding pattern.

Vicariance in southern Africa

The congruence between the south-eastern and the north-central southern rock agama clades and the south-eastern and north-western clades described for *Pronolagus* (Matthee & Robinson 1996) is noteworthy. This mtDNA pattern is also shared with *Pachydactylus* (Lamb & Bauer 2000) all of which suggest vicariance as a response to natural historical events. In addition, the geographical structuring within clades (for example the Pretoria, Bloemfontein, Augrabies and Postmasburg populations) clearly point to restricted dispersal capabilities and historical isolation of *A. atra* populations. Evidence exists that recent Kalahari sandflows from the north to the south could have acted as a physical barrier separating populations (Deacon & Lancaster 1988; Haacke 1989). The present-day pattern of sandflow originated during the last 20 000 years and there are indications that the movement of the sand was associated with cyclic windy periods (Lancaster 1981; Tyson 1986; Deacon & Lancaster 1988). During these oscillating periods, low-lying rocky outcrops could have been covered in sand (or may still be covered), making the habitat unsuitable for the dispersal of saxicolous species.

It is intriguing to speculate on what causes and maintains the isolation of the congruent genetic assemblages in *Agama*, *Pronolagus* and *Pachydactylus*. The raising of the Western Escarpment and the Cape Fold Mountains, the development of the Namib desert, and the changes in the course of the Orange River have been put forward as possible disrupters of gene flow between geographically contiguous populations in the region (Bauer 1999). Although the Orange River (which forms the natural border between South Africa to the south and Namibia to the north) can be put forward as a present-day impediment to gene flow among the northern and north-central agama clades, it has been shown to be ineffective in other rock-dwelling lizards (Bauer 1999; Lamb & Bauer 2000). Moreover, rivers in general do not seem to influence the distribution of land vertebrates (Gascon *et al*. 2000).

The formation of mountains and the development of intervening flatland areas (lacking rocky habitat suitable for *A. atra*) seems more likely as a possible barrier to gene flow. The most obvious barrier of this sort separating the south-eastern and north-central clades is the Knersvlakte region of the North-western Cape Province (Fig. 3B). However, the region is much narrower than extensive plains areas that currently delimit other agama populations within clades (for example the Free State Plains separating the Bloemfontein population; Fig. 3B). The Knersvlakte dates back to the upliftment of the great western escarpment during the Miocene, ≈ 18 Ma (Moon & Dardis 1988) and the best speculative estimate of the split between the *Agama* clades indicates a divergence at ≈ 715 000 years before present based on allozyme divergence (Flemming 1996). In contrast, however, using the suggested rate of 0.5–1.0%/Ma for 16*S* rRNA data (Caccone *et al*. 1997) the time of divergence among individuals belonging to the respective clades is roughly 2.2–4.4 Myr before present. Irrespective of the exact timing, the geological age of the Knersvlakte (18 Mya) seems to predate divergences within *A. atra*.

We believe it is more likely that these clades arose through temperature fluctuations and the associated wet–dry cycles on the topographical relief of southern Africa (Brain 1985). This probably caused the fragmentation among *A. atra* populations and lead to their isolation in mountainous refuges (also see Matthee & Robinson 1996). It is interesting to note that the earth's climate became cooler through the Tertiary (65 Ma) with frequent oscillations that increased in amplitude leading to a series of major ice ages during the past 3 Myr. The latter date not only coincides better with our speculative molecular clock estimations (see above) but it is also noteworthy that the cyclic climatic changes were particularly harsh on the western side of the continent with the eastern side probably remaining relatively temperate (Deacon & Lancaster 1988). Some support for this latter thread can be found in the fact that it is also in this western dry region of Southern Africa where population isolation/incipient speciation is the most pronounced among respective populations belonging to *A. atra*, *P. rupestris* and *P. rugosus*.

Acknowledgements

The authors would like to thank the following people who provided additional material for DNA extraction: N. Heidemann, N. Retief, P. Mouton, N. Dreyer and M. Branch. Terry Robinson, Barbara Stewart, Le Fras Mouton, Deryn Alpers and Michael Cunningham provided valuable comments on earlier drafts of this manuscript. Funding was provided by Stellenbosch University.

References

Arctander P (1995) Comparison of a mitochondrial gene and a corresponding nuclear pseudogene. *Proceedings of the Royal Society, London*, **262**, 13–19.

Avise JC, Johns GC (1999) Proposal for a standardized temporal scheme of biological classification for extant species. *Proceedings of the National Academy of Sciences of the USA*, **22**, 7358–7363.

Bauer AM (1999) Evolutionary scenarios in the *Pachydactylus* group geckos of southern Africa: new hypotheses. *African Journal of Herpetology*, **48**, 53–62.

Brain CK (1985) Temperature-induced environmental changes as biological isolating mechanisms in southern Africa. In: *Species and Speciation* (ed. Vrba, ES), pp. 45–52. Transvaal Museum, Pretoria, South Africa.

Branch WR (1998) *Field Guide to the Snakes and Other Reptiles of Southern Africa*. Struik Publishers, Cape Town, South Africa.

Branch WR, Whiting MJ (1997) A new *Platysaurus* (Squamata: Cordylidae) from the Northern Cape Province, South Africa. *African Journal of Herpetology*, **46**, 124–136.

Bristow D, Ward C (1988) *Mountains of Southern Africa*. Struik Publishers, Cape Town, South Africa.

Caccone A, Milinkovitch MC, Sbordoni V, Powell JR (1997) Mitochondrial DNA rates and biogeography in European newts (genus *Euproctus*). *Systematic Biology*, **46**, 126–144.

Deacon HJ, Lancaster N (1988) *Late Quaternary Palaeoenvironments of Southern Africa*. Claredon Press, Oxford.

Deacon HJ, Thackeray JF (1983) Late Pleistocene environmental changes and implications for archaeological records in southern Africa. In: *Proceedings of SASQUA International Symposium* (ed. Vogel, JC), pp. 375–390. AA. Balkema, Rotterdam, The Netherlands.

Esposti MD, De Vries S, Crimi M *et al.* (1993) Mitochondrial cytochrome *b*: evolution and structure of the protein. *Biochimica et Biophysica Acta*, **1143**, 243–271.

Flemming AF (1996) An analysis of the *Agama atra* complex (Reptilia: Agamidae) in Namaqualand and Southern Namibia. PhD Thesis, Stellenbosch University.

Flemming AF, Mouton PLeFN (2002) Paradoxical reproduction in the rock lizard *Agama atra* (Sauria; Agamidae) revisited. *Jounal of Herpetology*, in press.

Gascon C, Malcolm JR, Patton JL *et al.* (2000) Riverine barriers and the geographic distribution of Amazonian species. *Proceedings of the National Academy of Sciences of the USA*, **5**, 13672–13677.

Gatesy J, Amoto G, Vrba ES, Schaller G, DeSalle R (1997) A cladistic analysis of mitochondrial ribosomal DNA from the Bovidae. *Molecular Phylogenetics and Evolution*, **7**, 303–319.

Haacke WD (1989) Zoogeography of the Namib Desert reptiles as affected by dune formations. Abstracts and Programme. Dunes 1989 Meeting, Swakopmund, p. 48.

Hewitt G (2000) The genetic legacy of the quaternary ice ages. *Nature*, **405**, 907–913.

Irwin DM, Kocher TD, Wilson AC (1991) Evolution of cytochrome *b* gene of mammals. *Journal of Molecular Evolution*, **32**, 128–144.

Johns GC, Avise JC (1998) A comparative summary of genetic distances in the vertebrates from the mitochondrial cytochrome *b* gene. *Molecular Biology and Evolution*, **15**, 1499–1505.

Lamb T, Bauer AM (2000) Relationships of the *Pachydactylus rugosus* group of geckos (Reptilia: Squamata: Gekkonidae). *African Zoology*, **35**, 55–67.

Lancaster N (1981) Palaeoenvironmental implications of fixed dune systems in southern Africa. *Palaeogeography, Palaeoclimatology, and Palaeoecology*, **33**, 327–346.

Matthee CA, Robinson TJ (1996) Mitochondrial DNA differentiation among geographical populations of *Pronolagus rupestris*, Smith's red rock rabbit (Mammalia: Lagomorpha). *Heredity*, **76**, 514–523.

Matthee CA, Robinson TJ (1997) Mitochondrial DNA phylogeography and comparative cytogenetics of the springhare, *Pedetes capensis* (Mammalia: Rodentia). *Journal of Mammalian Evolution*, **4**, 53–73.

Matthee CA, Robinson TJ (1999) Mitochondrial DNA population structure of roan and sable antelope: implications for the translocation and conservation of the species. *Molecular Ecology*, **8**, 227–238.

Moon BP, Dardis GF (1988) *The Geomorphology of Southern Africa*. CTP Book Printers, Cape Town, South Africa.

Mouton PLeFN, Herselman YM (1994) Paradoxical reproduction and body size in the rock lizard, *Agama atra atra*. Namaqualand, South Africa. *South African Journal of Zoology*, **29**, 199–203.

Myers N, Mittermeier RA, Mittermeier CG, da Fonseca GAB, Keny J (2000) Biodiversity hotspots for conservation priorities. *Nature*, **403**, 853–858.

Nei M, Tajima F (1981) DNA polymorphism detectable by restriction endonucleases. *Genetics*, **97**, 145–163.

Prinsloo P, Robinson TJ (1992) Geographic mitochondrial DNA variation in the rock hyrax, *Procavia capensis*. *Molecular Biology and Evolution*, **9**, 447–456.

Thackeray JF (1987) Late Quaternary environmental changes inferred from small mammalian fauna, southern Africa. *Climatic Change*, **10**, 285–305.

Tyson PD (1986) *Climate Change and Variability in Southern Africa*. Oxford University Press, Oxford.

This phylogeographical study on a southern African vertebrate reflects on one of the research focuses of the newly established molecular zoology group at Stellenbosch University. C.A. Matthee is mainly interested in mammalian systematics and evolutionary population genetics and A.F. Flemming is a herpetologist who is studying reproductive and developmental biology.